LCDA2263C Three-phase closed loop stepper driver

用户手册/ User manual

深圳市新力川电气有限公司

Shenzhen Xinlichuan Electric Co., Ltd.

目 录 Catalog

版本号：V1.0

Chapter 1 Product Introduction

1.1 Product introduction

LCDA2263 is a new generation of digital three-phase closed-loop stepper driver developed based on 32-bit DSP technology. The driver adopts a new structure and control scheme, and a new interface scheme, making it more convenient and faster for users to use. The driver combines more advanced Algorithm, greatly reduces the noise of the motor during operation, making the motor run more smoothly and reliably。

1.2 Product specifications

- Voltage input range: AC150V～250V
- Maximum peak current: 6.0A
- Segmentation range: 400~60000ppr
- Pulse form: pulse + direction (double pulse is not supported)
- Impulse response frequency: 0～200kHz
- With overvoltage, overcurrent, motor phase loss and other protection functions

1.3 Installation dimensions

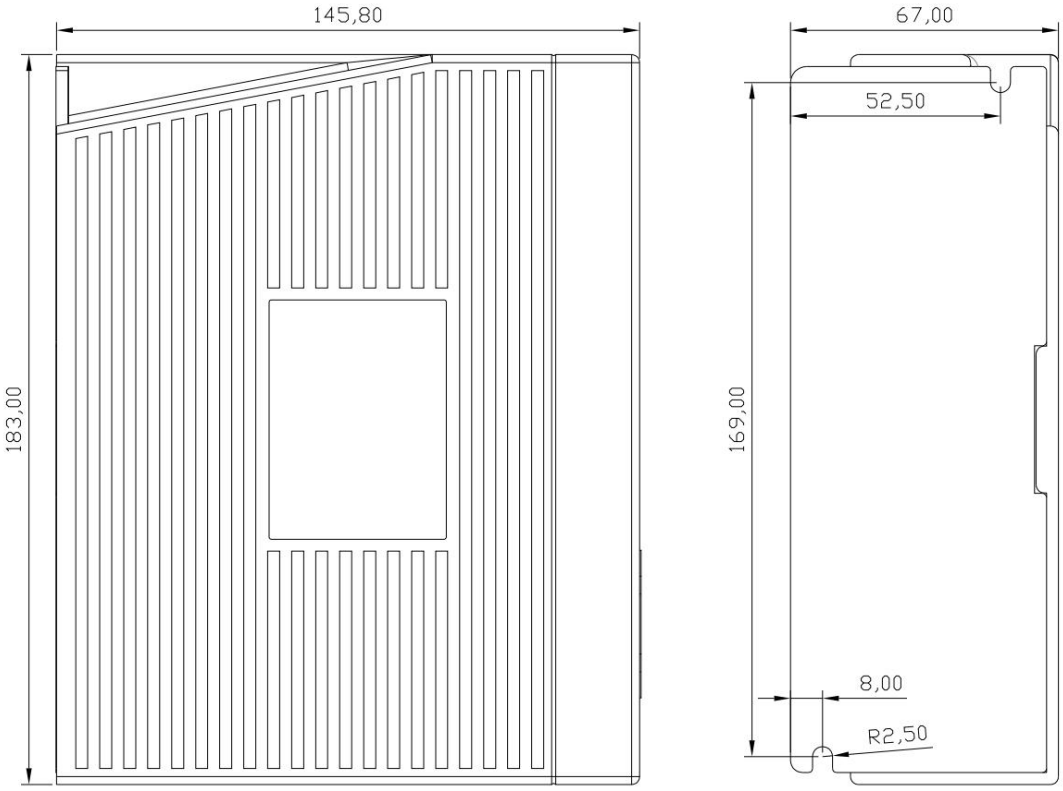

Chapter 2 Wiring and Settings

2.1 Terminal function description

2.1.1 Power terminal

Terminal No.	Notation	Explanation
1	NC	empty legs
2	U	Three-phase stepper motor winding
3	V	
4	W	
5	PE	earth
6	AC	AC power input AC150V～250V
7	AC	

2.1.2 Control signal terminal block

Terminal No.	Notation	Explanation
1	PUL+	Pulse signal input terminal (5V-24V)
2	PUL-	
3	DIR+	Direction signal input terminal (5V-24V)
4	DIR-	
5	ENA+	Release signal input terminal (5V-24V)
6	ENA-	
7	ALM+	Alarm signal output terminal Normally closed output
8	ALM-	
9	RDY+	Be ready signal output terminal Normally closed output
10	RDY-	

2.1.3 Encoder signal terminal block

Terminal No.	Notation	Explanation
1	EA+	Encoder A phase feedback signal
2	EA-	
3	EB+	Encoder B phase feedback signal
4	EB-	

5	EZ+	Encoder Z phase feedback signal (Default is not connect)
6	EZ-	
7	+5V	Encoder power supply positive
8	GND	Encoder power supply negative

2.2 Wiring instructions

2.2.1 Input signal wiring diagram (input supports 5-24V voltage)

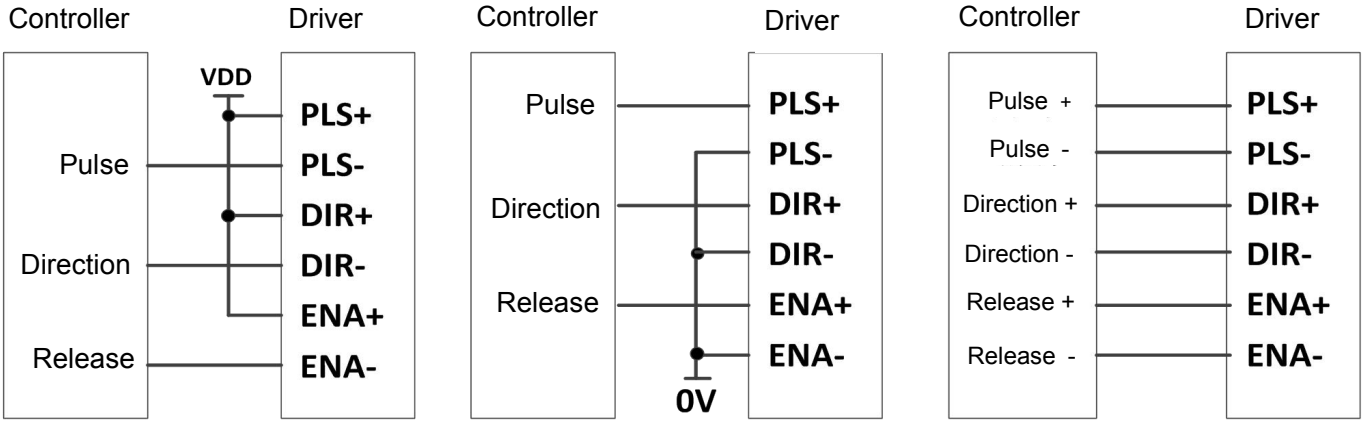

Common anode connection method common cathode connection Differential signal connection

2.2.2 Output signal wiring diagram

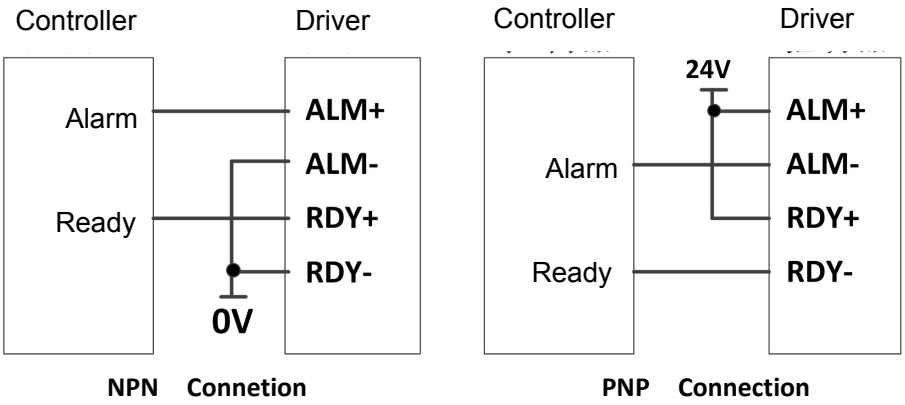

2.2.3 Signal control timing diagram

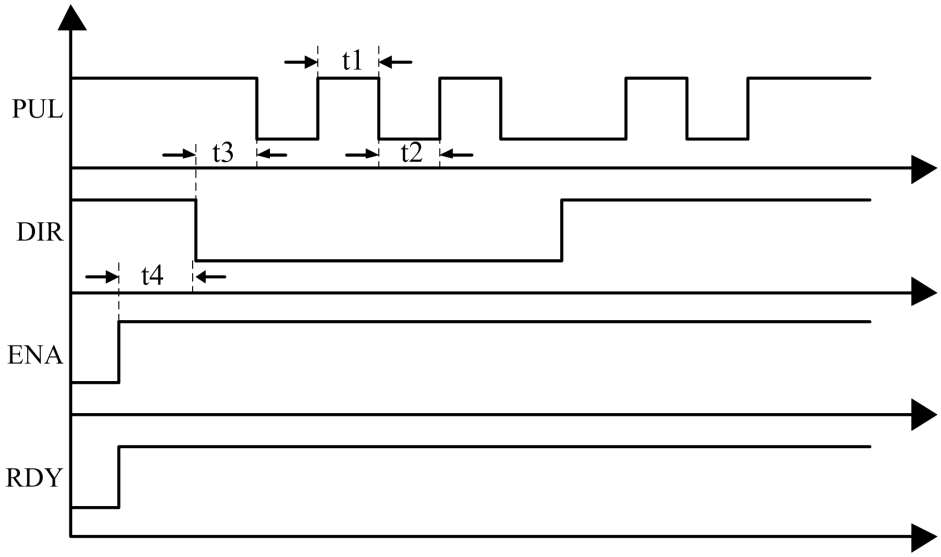

Please Note:
t1 and t2 should be greater than 5us; when SW10 is ON, t1 and t2 should be greater than 2ns.
t3 and t4 should be greater than 1ms.

2.3 Button function description

2.3.1 Introduction to debugging panel

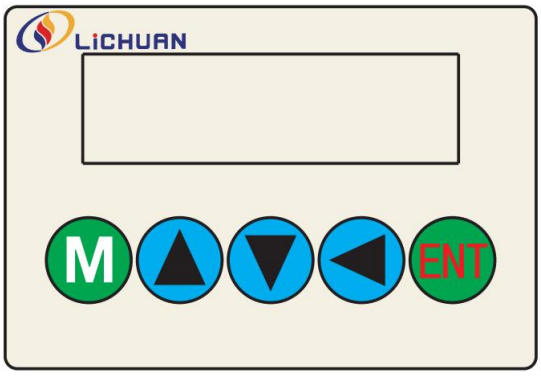

Key symbol	Key Description
◀	The input bit (indicated by flashing) moves left
▲	Switch submenu, increase value
▼	Switch submenus, reduce values
ENT	Enter the submenu and confirm the input
M	Can switch between modes

2.3.2 Data monitoring

LED display	Explanation
d000EP	The current position deviation is converted to the number of code wheel lines
d001SP	Current speed feedback (rpm)
d002SP	Current speed given (rpm)
d003PU	The number of pulses after 4 times the frequency of the current position feedback encoder, calculated from the time of power-on initialization.
d004PU	The current position gives the original pulse number, calculated from the time of power-on initialization.
d005CU	Current peak value (mA)
d006Er	Current fault value. 01: Overcurrent; 02: Overvoltage; 04: Excessive position deviation alarm

2.2.3 Operating procedures

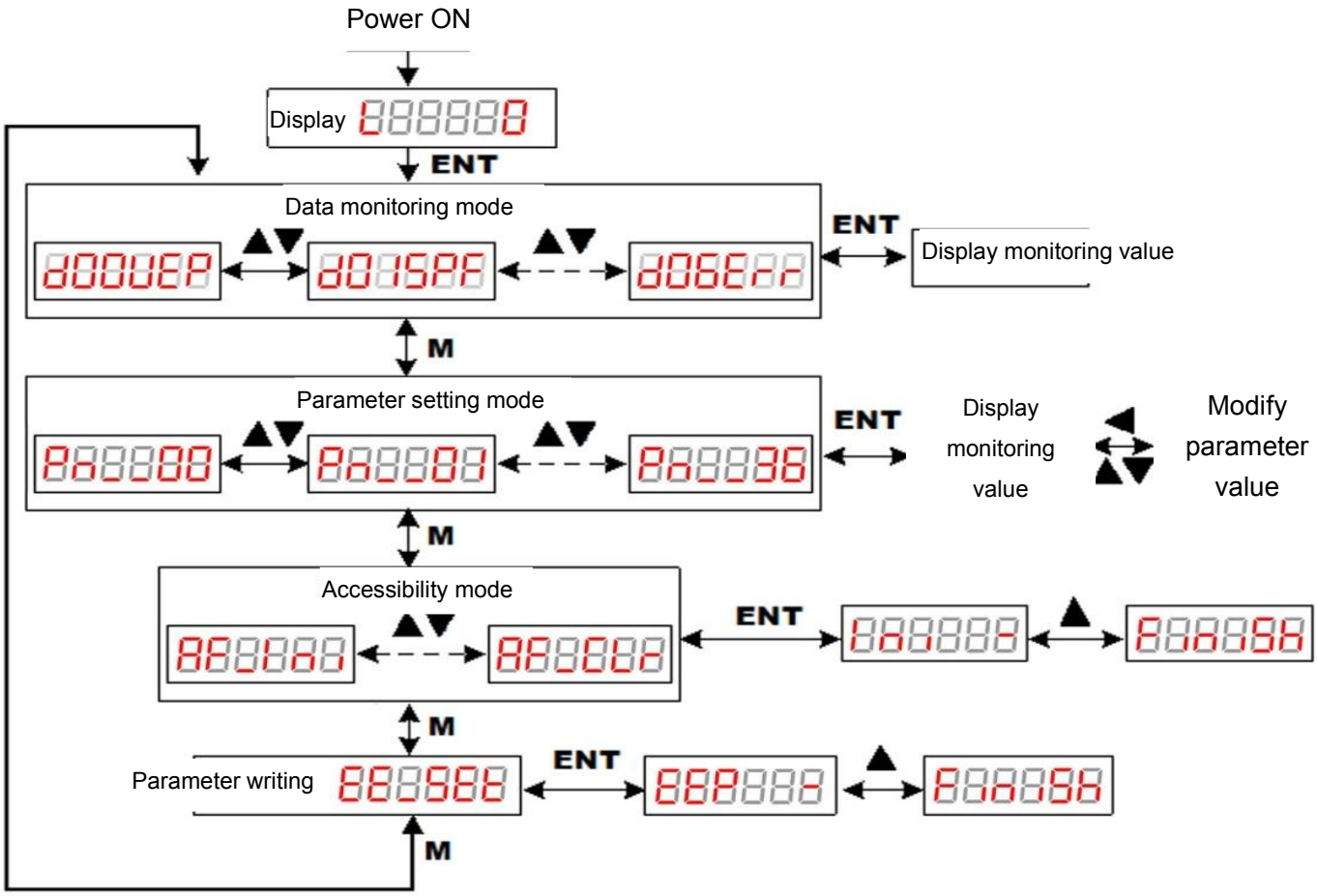

Restore factory settings： Press the key (M) to switch to "AF_Ini", then press the key (ENT) to display “Inl -”, and then press the key (▲) When "FiniSh" appears, the setting is completed. 。

Clear alarm ： Press the key (M) to switch to "AF_CLr", then press the key (ENT) to display “CLr -”, and then press the key (▲), When "FiniSh" appears, the setting is completed.

Parameter writing: Press the key (M) to switch to "EE_SEt", then press the key (ENT) to display “EEP -”, and then press the key (▲) for 5 seconds . When "FiniSh" appears, the setting is completed.

2.2.4 Parameter Description

Address	Parameter	Defaul t value	Range	Explanation
PA00	Number of given pulses per motor revolution	4000	400~51200	P
PA01	Number of feedback pulses per code wheel revolution	4000	4000~6553 5	P
PA02	Open loop standby current percentage	60	0~100	%
PA03	Closed loop current percentage	100	0~100	%
PA04	Input pulse smoothing enable	1	0~1	1 permit
PA05	Input pulse smoothing time	12800	0~25600	us
PA06	Operating mode settings	1	0~1	0/open loop, 1/closed loop
PA07	Manufacturer parameters 1	75	30-100	%
PA08	Motor self-identification setting after power-on	1	0~1	1 permit
PA09	Current loop proportional coefficient	2000	200~32767	
PA10	Current loop integral coefficient	200	10~32767	
PA11	Manufacturer parameters	4000	100~32767	
PA12	Position loop proportional coefficient	4000	100~32767	
PA13	Manufacturer parameters	260	20~32767	
PA14	Speed loop proportional coefficient	220	20~32767	
PA15	Manufacturer parameters	50	0~32767	
PA16	Speed feedforward compensation coefficient	370	0~500	
PA17	Position out-of-tolerance threshold setting	4000	1~65535	P
PA18	Debounce time	2	0~10000	50us

PA19	Enable level logic	1	0~1	0 is positive logic, 1 is negative logic.
PA20	Output port 1 function selection	1	0~4	0 alarm, 2RDY, 4 in place signal
PA21	Output port 1 logic selection	1	0~1	0 is positive logic, 1 is negative logic.
PA22	Brake output delay setting	100	0~2000	ms
PA23	In place output port function selection	0	0~1	0 in place signal, 1 brake signal.
PA24	In place output port logic selection	0	0~1	0 is positive logic, 1 is negative logic.
PA25	Manufacturer parameters	40		
PA26	Manufacturer parameters	0		
PA27	Positive direction input logic selection	1	0~1	0 is positive logic, 1 is negative logic.
PA28	In-position signal pulse limit setting	5	1~1000	P
PA29	Manufacturer parameters	800	50~10000	Hz
PA30	Torque given filter cutoff frequency	1000	50~5000	Hz
PA31	Speed feedback filter cutoff frequency	100	10~1000	Hz
PA32	Speed given filter cutoff frequency	160	10~1000	Hz
PA33	Manufacturer parameters	100	20~180	%
PA34	Manufacturer parameters 2	50		
PA35	Manufacturer parameters	100	0~100	%
PA36	Power-on anti-jamming option	0	0~1	0 cancel, 1 start
PA37	Manufacturer parameters	21		
PA38	Manufacturer parameters	75		
PA39	acceleration feedforward	70	0~1024	
PA40	Self-running speed setting	60	0~5000	0.01rps
PA41	Self-run position setting	100	0.01r	
PA42	Self-run times setting	1	0~32000	
PA43	Self-run starting direction setting	1	0~1	
PA44	Self-running interval setting	100	1~5000	ms
PA45	Self-running one-way and two-way settings	1	0~1	0 one-way, 1 two-way
PA46	Self-running acceleration settings	200	10~2000	r/s/s
PA47	Self-run startup settings			Set to 1 to start and automatically return to 0 after running.

Chapter 3 Troubleshooting

4.1 Common faults and solutions

Alarm code	Fault description	Troubleshooting
ER 001	Overcurrent alarm	1. Motor line power line short circuit or motor failure; 2. The driver current loop parameters are set too large; 3. If there are no errors in the above two points, it may be an internal fault of the drive and needs to be returned to the factory for inspection.
ER 002	Overvoltage alarm	1. The power supply voltage is too high or the voltage is unstable. Check whether the output voltage of the transformer is normal; 2. The driver has an internal fault and needs to be returned to the factory for inspection.
ER 004	Position deviation is too large	1. The phase sequence of the motor power wires is reversed. Check the wire sequence according to the label on the motor; 2. Looseness, poor contact or breakage of the motor power line or encoder line will cause this fault. If there is a spare cable, you can try to replace the cable;
ER 020		

Shenzhen Xinlichuan Electric Co., Ltd.

website: http://www.xlichuan.com